!"#$"%&#' ())'$)) *'+,"&-

:

: MDC90A-T02

ZHEJIANG SHILING SEMICONDUCTOR CO.,LTD.

0578 3012571 3615078
0578 3611180
323000
E-mail:smrshiling01@163.com
Http//www.smrshiling.com

05 2023.8

SYMBOL	CHARACTERISTIC	TEST CONDITIONS	T_j(℃)	VALUE			UNIT
				Min	Type	Max	
$I_{T(AV)}$	Mean on-state current	180°-half sine wave 50Hz Single side cooled,T_C=85°C	125			90	A
$I_{T(RMS)}$	RMS on-state current	Single side cooled,T_C=85°C	125			90	

OUTLINE DRAWING & CIRCUIT DIAGRAM



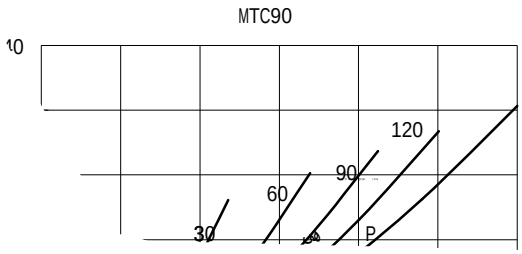
MTC90
10
120
90
60
30
P

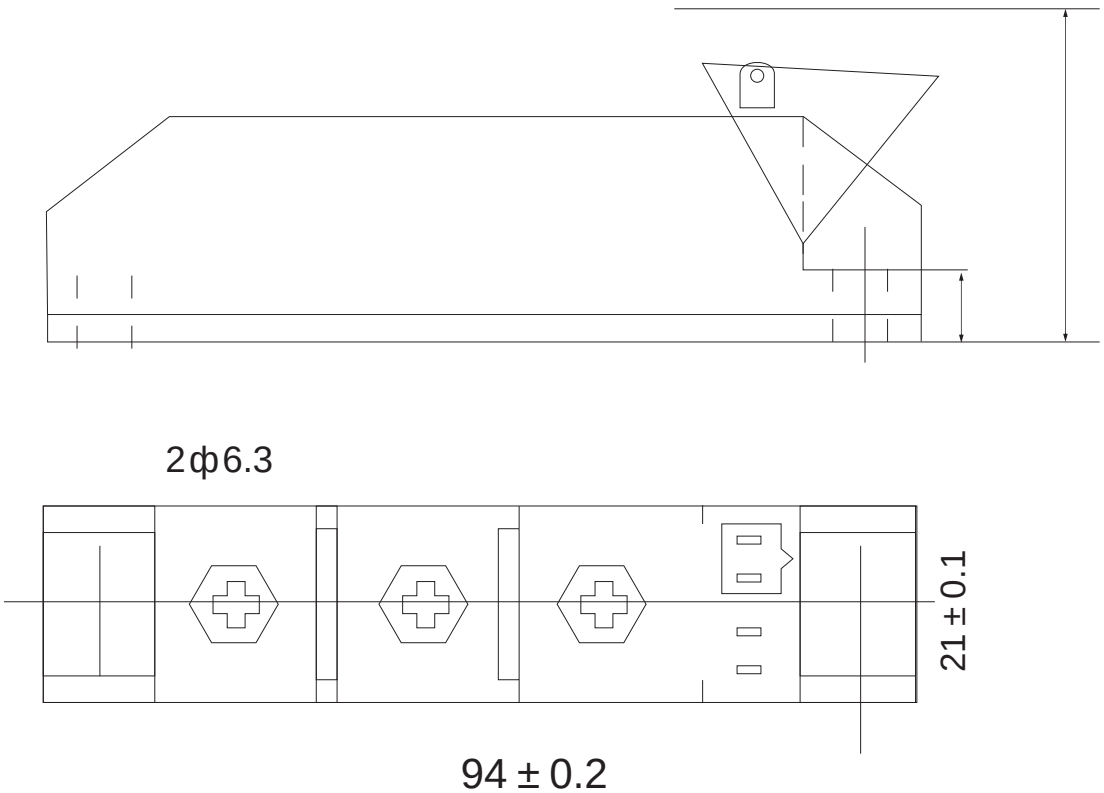
2φ6.3
21 ± 0.1
94 ± 0.2